MULTIBAND HEADENDS

«AFI» — Sat-IF Combiner/Amplifier CE

- 1 Satellite 950-2150 MHz input port, with adjustable gain and pre-emphasized response to compensate for cable losses; 1 Terrestrial coupling 5-862 MHz input port; 1 Combined Satellite+Terrestrial output port; 1 output test port. F type connection.
- Mains powered 50/60 Hz. Electrical safety protection level: Class II. Mains lead and plug included.
- Line powering of LNB. Generation of voltage/tone for selection of H/V polarisation and high/low frequency sub-band by the small plug-in bridges provided.
- Small plastic box, with protective cover. Internal zinc alloy chassis. F type connection.
- Indoor mounting. Wall- fixing.

AFI-840

Model		AFI-840
Reference		1164
Sat-IF band	MHz	950 - 2150
Response flatness	dB	± 1.5
Gain	dB	34 - 40 (6 dB fixed slope)
Continuous gain adjustment	dB	0 - 18
Output level (-35 dB IMD3, EN 50083-3)	dBµV	120 [1]
Input/output return loss	dB	≥ 6
Noise figure	dB	< 9
TV band	MHz	5 - 862
TV coupling loss	dB	≤ 1.5
Output test (TV+IF)	dB	-30 ±1.5
Mains voltage	VAC	100 - 240
Consumption	W	6
Insertable voltage/tone to Sat-IF input port		+13 VDC / +18 VDC [2] 0 / 22 kHz [2]
Max LNB power current	mA	200 (at +13 VDC) „ 100 (at +18 VDC)
Dimensions	mm	120 x 85 x 50

Application example

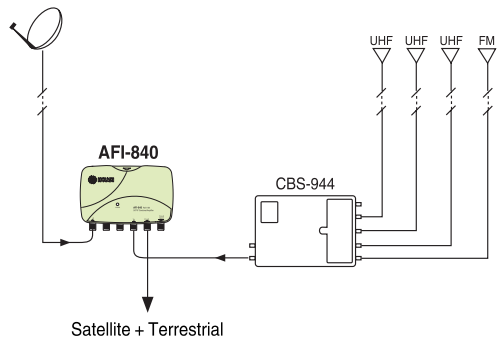

Notes

[1] See Reduction Table on page 166 (Technical Annex)

[2] Selection by plug-in bridges
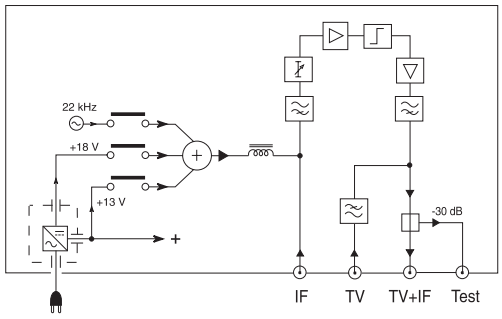
Block diagram